UNIVERSITY OF CAMBRIDGE INTERNATIONAL EXAMINATIONS
International General Certificate of Secondary Education

CANDIDATE NAME	

CENTRE NUMBER						CANDIDATE NUMBER				

PHYSICS **0625/63**

Paper 6 Alternative to Practical **May/June 2010**

1 hour

Candidates answer on the Question Paper.

No Additional Materials are required.

READ THESE INSTRUCTIONS FIRST

Write your Centre number, candidate number and name on all the work you hand in.
Write in dark blue or black pen.
You may use a pencil for any diagrams, graphs or rough working.
Do not use staples, paper clips, highlighters, glue or correction fluid.
DO **NOT** WRITE IN ANY BARCODES.

Answer **all** questions.

At the end of the examination, fasten all your work securely together.
The number of marks is given in brackets [ ] at the end of each question or part question.

For Examiner's Use	
1	
2	
3	
4	
5	
Total	

This document consists of **10** printed pages and **2** blank pages.

© UCLES 2010

For Examiner's Use

1 The IGCSE class is determining the mass of a load using a balancing method.

Fig. 1.1 shows the apparatus.

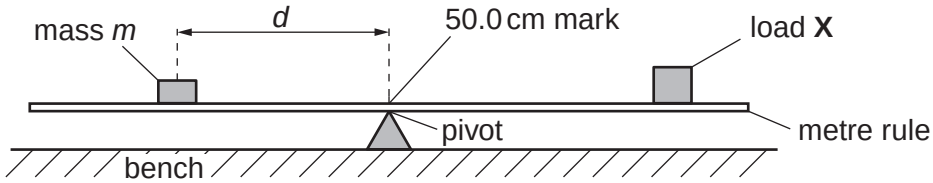

Fig. 1.1

The load **X** has been taped to the metre rule so that its centre is exactly over the 90.0 cm mark. It is not moved during the experiment. A mass *m* of 40 g is placed on the rule and its position adjusted so that the rule is as near as possible to being balanced with the 50.0 cm mark exactly over the pivot. This is repeated using a range of masses. The readings are shown in Table 1.1

Table 1.1

m / g	*d* / cm	$\frac{1}{d}$ / $\frac{1}{\text{cm}}$
40	30.2	
50	23.9	
60	20.0	
70	17.1	
80	15.1	

(a) For each value of *d*, calculate 1/*d* and record it in the table. [2]

For Examiner's Use

(b) Plot a graph of m/g (y-axis) against $\frac{1}{d} \Big/ \frac{1}{\text{cm}}$ (x-axis).

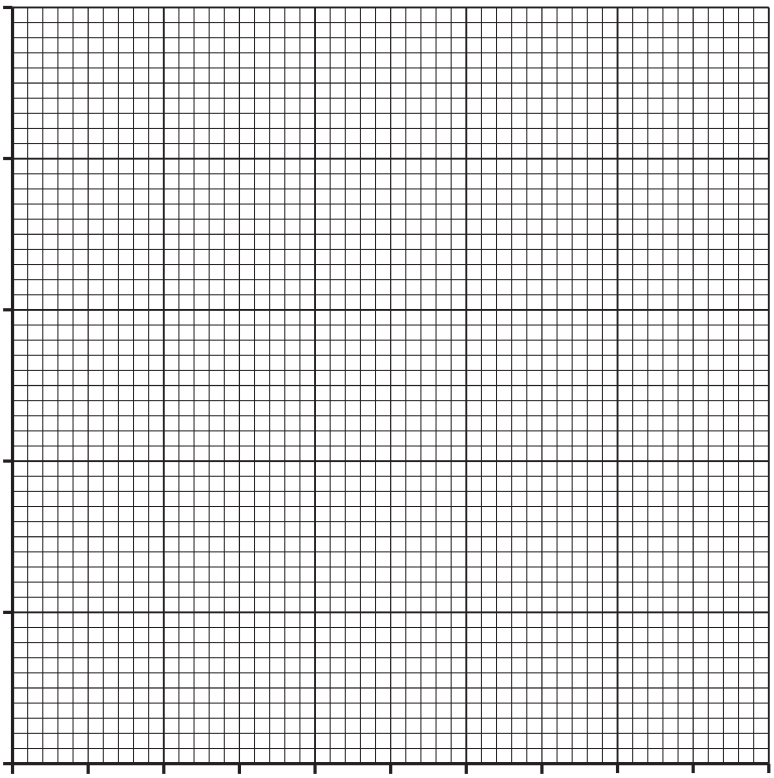

[4]

(c) Determine the gradient G of the graph. Show clearly on the graph how you obtained the necessary information.

G = ... [2]

(d) Determine the mass μ of the load **X** using the equation $\mu = G/k$ where k = 40.0 cm.

μ = ... [2]

For Examiner's Use

2 An IGCSE student is investigating the rate of cooling of water in different containers. Fig. 2.1 shows the two containers.

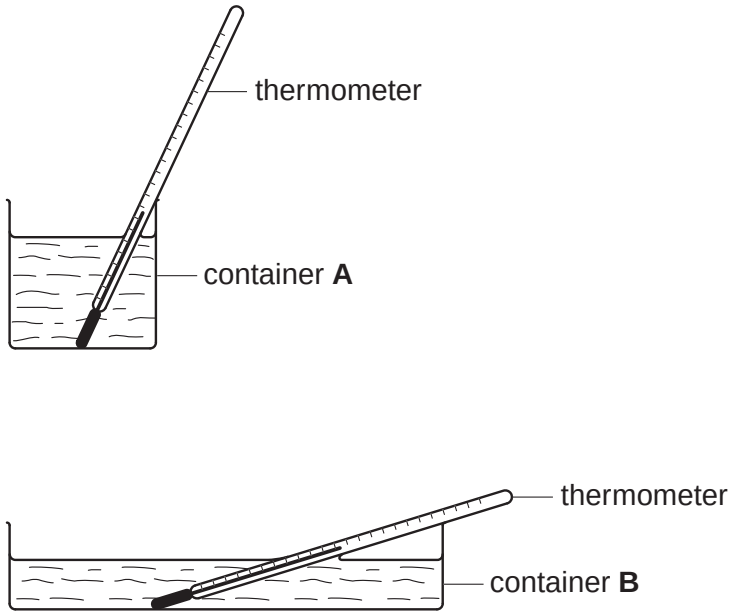

Fig. 2.1

Approximately 200 cm^3 of hot water is poured into container **A**. A stopclock is started and the temperature of the water is recorded at 30 s intervals. Hot water is then poured into container **B** until there is sufficient to cover the thermometer bulb. The stopclock is started and the temperature of the water is recorded at 30 s intervals. All the temperature readings are shown in Table 2.1.

Table 2.1

	container **A**	container **B**
t /	θ /	θ /
0	80	78
	71	66
	65	59
	59	55
	56	51
	55	49
	54	48

(a) **(i)** Complete the column headings in the table.

(ii) Complete the time column in the table.

[2]

For Examiner's Use

(b) Calculate the temperature change of the water in each container over the period of 180 s.

Container **A** temperature change = ...

Container **B** temperature change = ... [1]

(c) State which container, **A** or **B**, has the greater rate of cooling. Justify your answer by reference to the readings.

Statement .....

Justification .....

..... [2]

(d) To make a fair comparison between the rates of cooling of the hot water in the two containers it is important to control other experimental conditions. Suggest two conditions that should be controlled in this experiment.

1. .....

2. ..... [2]

For Examiner's Use

3 The IGCSE class is determining the resistances of lamps in different circuit arrangements.

The first circuit is shown in Fig. 3.1. This is Circuit 1.

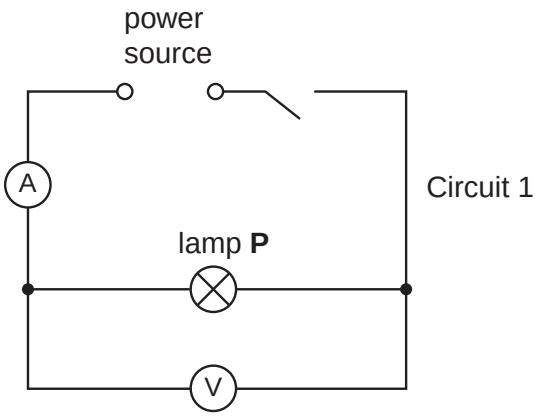

Fig. 3.1

A student measures the current *I* in the circuit and the p.d. *V* across lamp **P**. He then replaces lamp **P** with lamp **Q** to set up Circuit 2 (not shown) and records the readings of current *I* and potential difference *V*.

He then returns lamp **P** to the circuit so that lamps **P** and **Q** are in parallel with each other. This is Circuit 3. He again records the readings of current *I* and potential difference *V*. All the readings are in Table 3.1.

Table 3.1

	V /	*I* /	*R* /
Circuit 1	1.9	0.31	
Circuit 2	1.8	0.30	
Circuit 3	1.9	0.61	

(a) Draw a diagram of Circuit 3 using standard circuit symbols.

[3]

For Examiner's Use

(b) **(i)** Calculate the resistance R of the lamp arrangement for each circuit, using the equation $R = V/I$.

Record the values of R in Table 3.1.

(ii) Complete the column headings in the table. [3]

(c) A student suggests that the resistance of lamp **P** added to the resistance of lamp **Q** should be equal to the combined resistance of the two lamps when arranged in parallel in Circuit 3. State whether or not the results in the table support this suggestion and justify your answer **with reference to the results**.

Statement .....

Justification .....

.....

..... [2]

For Examiner's Use

4 The IGCSE class is investigating refraction and reflection of light in a transparent block.

The block rests on a pin board covered with a sheet of plain paper. Some of the lines and labels that a student draws are shown in Fig. 4.1.

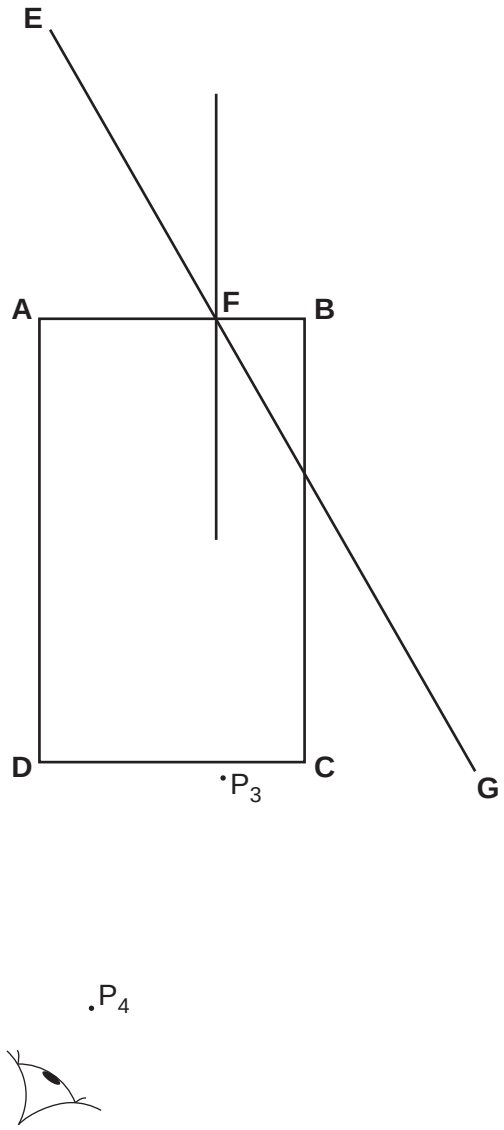

Fig. 4.1

(a) The student places the transparent block **ABCD** on the sheet of plain paper. The student draws a line around the block and then draws a normal to side **AB**.
On Fig. 4.1 label the normal **NN'**.

[1]

(b) Line **EF** shows an incident ray that is at an angle of incidence i = 30° to the normal. The student continues the line to a point **G**.
Draw two neat crosses on line **EF** and label them P_1 and P_2 to show suitable positions for two pins that are to be used to trace the direction of the incident ray. [1]

For Examiner's Use

(c) The student observes the images of P_1 and P_2 through side **CD** of the block from the direction indicated in Fig. 4.1 so that the images of P_1 and P_2 appear one behind the other. She then places two pins P_3 and P_4 between her eye and the block so that P_3, P_4 and the images of P_1 and P_2, seen through the block, appear in line. The positions of P_3 and P_4 are marked.

(i) Draw a line joining the positions of P_3 and P_4. Continue the line so that it crosses **CD** and extends beyond **BC** to cross line **EFG**. Label the end of the line **H**.

(ii) Measure the smaller angle θ between **EFG** and the line joining the positions of P_3, P_4 and **H**.

θ = ...

(iii) Calculate the difference $(\theta - 2i)$. Show your working.

$(\theta - 2i)$ = ...
[4]

(d) The student repeats the experiment using an angle of incidence i = 40° to the normal and obtains a value of θ = 82°.

Calculate the difference $(\theta - 2i)$.

$(\theta - 2i)$ = ...[1]

(e) Theory suggests that $\theta = 2i$. State whether the two results in parts **(c)** and **(d)** support the theory and justify your answer by reference to the results.

Statement .....

Justification .....

.....[2]

For Examiner's Use

5 An IGCSE student is determining the magnification of an image formed by a lens. The experimental set up is shown in Fig. 5.1.

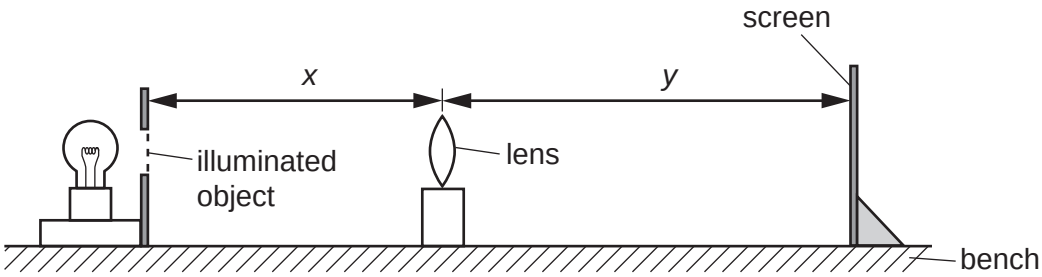

Fig. 5.1

The screen consists of a sheet of white paper stuck to a vertical board.
The position of the screen is adjusted until a focused image of the object is formed on the screen.

(a) **(i)** On Fig. 5.1 measure the distances *x* and *y*.

x = ...

y = ...

(ii) Calculate the magnification *m* using the equation $m = y/x$.

m = ...
[3]

(b) Suggest two precautions that you would take to obtain reliable results in this experiment.

1. .....

.....

2. .....

.....[2]

(c) The student wishes to measure the height of the image on the screen in order to check his result. However he finds that when he tries to do this his hand and the rule prevent the light reaching the screen. Suggest briefly a method he could use to measure the height of the image on the screen that would overcome this problem.

.....

.....[1]

BLANK PAGE

BLANK PAGE

Permission to reproduce items where third-party owned material protected by copyright is included has been sought and cleared where possible. Every reasonable effort has been made by the publisher (UCLES) to trace copyright holders, but if any items requiring clearance have unwittingly been included, the publisher will be pleased to make amends at the earliest possible opportunity.

University of Cambridge International Examinations is part of the Cambridge Assessment Group. Cambridge Assessment is the brand name of University of Cambridge Local Examinations Syndicate (UCLES), which is itself a department of the University of Cambridge.

© UCLES 2010