Cambridge International Examinations
Cambridge International General Certificate of Secondary Education

CANDIDATE NAME	

CENTRE NUMBER						CANDIDATE NUMBER					

PHYSICS **0625/62**

Paper 6 Alternative to Practical **May/June 2014**

1 hour

Candidates answer on the Question Paper.

No Additional Materials are required.

READ THESE INSTRUCTIONS FIRST

Write your Centre number, candidate number and name on all the work you hand in.
Write in dark blue or black pen.
You may use an HB pencil for any diagrams or graphs.
Do not use staples, paper clips, glue or correction fluid.
DO **NOT** WRITE IN ANY BARCODES.

Answer **all** questions.
Electronic calculators may be used.
You may lose marks if you do not show your working or if you do not use appropriate units.

At the end of the examination, fasten all your work securely together.
The number of marks is given in brackets [ ] at the end of each question or part question.

The syllabus is approved for use in England, Wales and Northern Ireland as a Cambridge International Level 1/Level 2 Certificate.

This document consists of **11** printed pages and **1** blank page.

DC (SJF/KN) 81313/3
© UCLES 2014

CAMBRIDGE International Examinations

1 An IGCSE student is taking measurements of a pencil.

Fig. 1.1 shows the pencil, drawn full size.

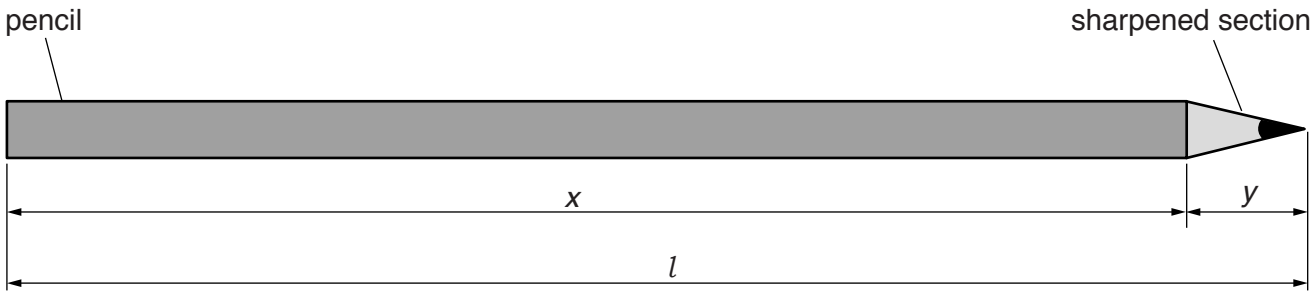

Fig. 1.1

(a) **(i)** On Fig. 1.1, measure, in cm, the total length l of the pencil.

l = ... cm

(ii) Measure, in cm, the length x of the unsharpened section of the pencil.

x = ... cm

(iii) Calculate the length y of the sharpened section of the pencil, using the equation $y = (l - x)$.

y = ... cm
[2]

(b) Describe how you would use a length of string and a rule to determine the circumference c of the unsharpened section of the pencil.

.....

.....

.....

.....

.....[2]

(c) The student's value for the circumference is $c = 2.4$ cm.

(i) Suggest a source of inaccuracy in determining the circumference of the pencil.

.....

.....[1]

(ii) Calculate the volume V of the unsharpened section of the pencil using the equation $V = \frac{c^2 x}{4\pi}$.

V = ... [1]

(iii) Estimate the volume V_E of the sharpened section of the pencil. Show your working or reasoning.

V_E = ... [2]

[Total: 8]

2 The IGCSE class is investigating the cooling of water.

A student places a thermometer into a beaker containing 200 cm^3 of hot water, as shown in Fig. 2.1.

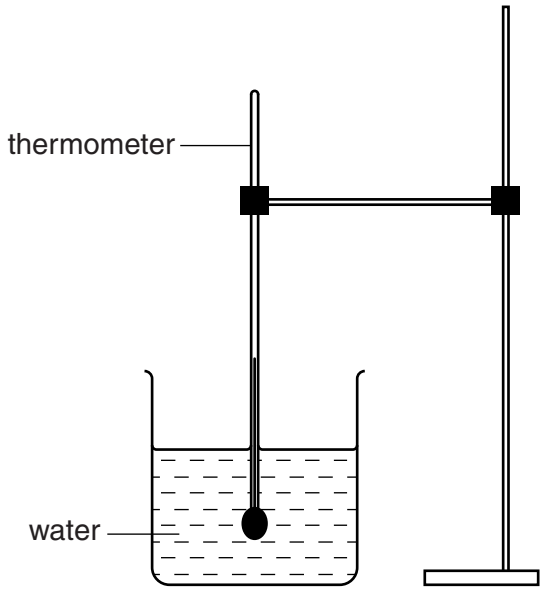

Fig. 2.1

(a) **(i)** Record the temperature θ_H of the hot water, shown on the thermometer in Fig. 2.2. Write the value in Table 2.1 for time $t = 0$ s.

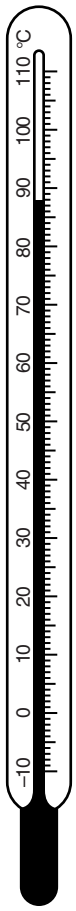

Fig. 2.2

(ii) The student leaves the thermometer in the hot water and records the temperature θ every 30 s. The readings are shown in Table 2.1.

Table 2.1

t/	θ/
0	
30	74
60	67
90	63
120	61
150	59

Complete the column headings in the table.

[2]

(b) Plot a graph of θ/°C (y-axis) against t/s (x-axis).

[5]

(c) **(i)** Describe briefly the shape of the best-fit graph line that you have drawn.

.....

(ii) State what the shape of the graph line tells you about the change, if any, in the rate of cooling of the water during the experiment.

.....

.....
[2]

(d) Describe briefly how you would read a measuring cylinder to obtain an accurate value for the volume of water. You may draw a diagram.

.....

.....

.....

.....[1]

[Total: 10]

BLANK PAGE

3 The IGCSE class is investigating the resistance of a resistor.

Fig. 3.1 shows the circuit.

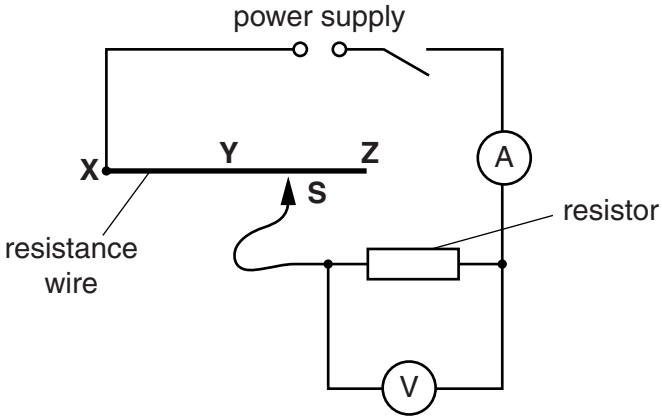

Fig. 3.1

(a) A student connects the sliding contact **S** to point **X** in the circuit. She measures the potential difference V across the resistor and the current I in the circuit. The meters are shown in Fig. 3.2.

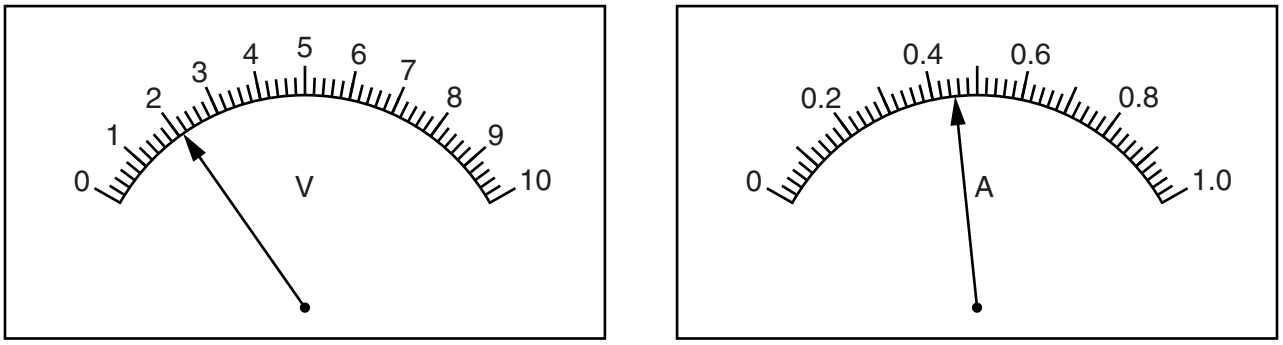

Fig. 3.2

(i) Write down the readings shown on the meters in Fig. 3.2.

V = ...

I = ...
[2]

(ii) Calculate the resistance R of the resistor using the equation $R = \frac{V}{I}$.

R = ... [2]

(b) The student repeats the steps in **(a)**, moving the sliding contact to point **Y** and then to point **Z**.

Comment on the effect, if any, on the current I in the circuit of changing the position of the sliding contact in this way.

.....

.....[1]

(c) In this experiment, the resistance wire **XYZ** acts as a variable resistor (rheostat).

Draw the standard circuit symbol for a variable resistor.

[1]

(d) A student carries out this experiment using a different resistor. He takes readings using various lengths of resistance wire in the circuit. He plots a graph of V/V against I/A.

Fig. 3.3 is a sketch of the graph.

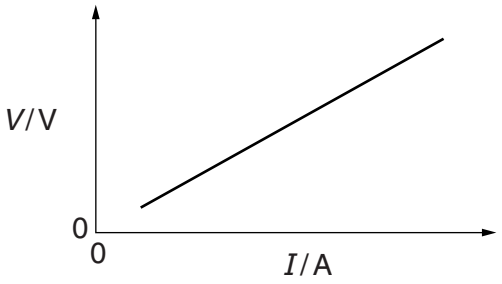

Fig. 3.3

Explain briefly how the student would use the graph to determine the gradient of the line. You may draw on the graph of Fig. 3.3. You are not asked to calculate the value of the gradient.

.....

.....

.....[2]

[Total: 8]

4 An IGCSE student is determining the focal length of a lens.

Fig. 4.1 shows the apparatus.

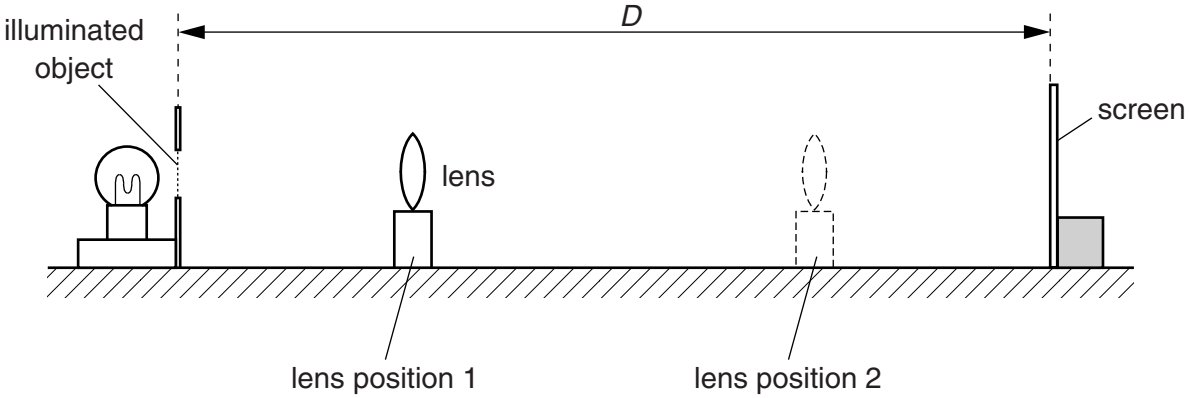

Fig. 4.1

(a) The student places the screen at a distance D = 80.0 cm from the illuminated object. He places the lens close to the illuminated object. He moves the lens until a sharply-focused image of the object is seen on the screen (lens position 1).

He measures the distance x from the illuminated object to the centre of the lens.

x = 19.5 cm

He does not move the object or the screen, but moves the lens towards the screen until another sharply-focused image of the object is seen on the screen (lens position 2). He measures the distance y from the illuminated object to the centre of the lens.

y = 60.4 cm

(i) On Fig. 4.1, carefully mark and label the distances x and y. [1]

(ii) Calculate d using the equation $d = (y - x)$.

d = ...

(iii) Calculate d^2.

d^2 = ...

(iv) Calculate the focal length f of the lens, using the equation $f = \frac{D^2 - d^2}{4D}$.

f = ...
[2]

(b) State two precautions that you would take in this experiment to obtain reliable results.

1. .....

.....

2. .....

.....
[2]

(c) In the experiment, the student produces two images on the screen. They are both sharply focused.

(i) Suggest two differences between the two images.

1. .....

2. .....

(ii) Suggest one similarity between the two images.

.....

.....
[3]

(d) Suggest a variable that could be changed when repeating this experiment to check the accuracy of the value obtained for the focal length f.

.....[1]

[Total: 9]

5 An IGCSE student is investigating the average speed of a toy car travelling down a slope.

She releases the toy car on the slope. She uses a stopwatch to measure the time taken for the car to travel down part of the slope. Fig. 5.1 shows the slope.

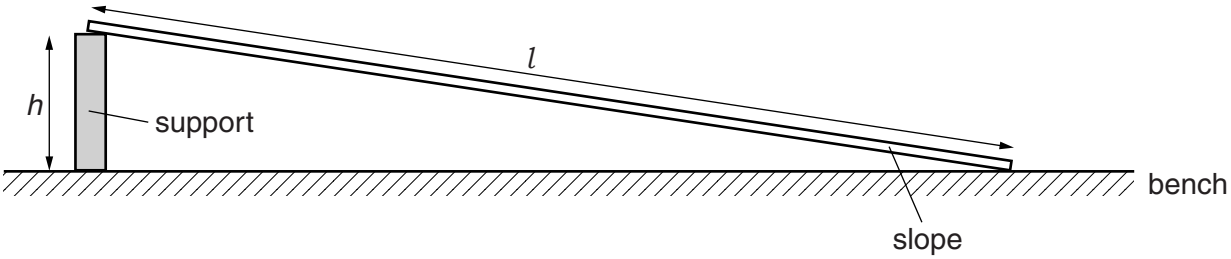

Fig. 5.1

(a) **(i)** Suggest a suitable length l for the slope used in this school laboratory experiment.

l = ...

(ii) Suggest a suitable height h, above the laboratory bench, for one end of the slope.

h = ...
[2]

(b) The student tries to determine the time that the toy car takes to travel a distance down the slope.

Make three suggestions about what she could do to ensure that the distance travelled and the time taken by the toy car are measured as reliably as possible.

1. .....

.....

2. .....

.....

3. .....

.....
[3]

[Total: 5]

Permission to reproduce items where third-party owned material protected by copyright is included has been sought and cleared where possible. Every reasonable effort has been made by the publisher (UCLES) to trace copyright holders, but if any items requiring clearance have unwittingly been included, the publisher will be pleased to make amends at the earliest possible opportunity.

Cambridge International Examinations is part of the Cambridge Assessment Group. Cambridge Assessment is the brand name of University of Cambridge Local Examinations Syndicate (UCLES), which is itself a department of the University of Cambridge.

© UCLES 2014