Cambridge IGCSE

**Cambridge International Examinations**
Cambridge International General Certificate of Secondary Education

| | | | | | | | | | |
|---|---|---|---|---|---|---|---|---|---|
| CANDIDATE NAME | | | | | | | | | |
| CENTRE NUMBER | | | | | | CANDIDATE NUMBER | | | | |

*5249192930*

**PHYSICS** **0625/32**

Paper 3 Theory (Core) **May/June 2016**

**1 hour 15 minutes**

Candidates answer on the Question Paper.

No Additional Materials are required.

**READ THESE INSTRUCTIONS FIRST**

Write your Centre number, candidate number and name on all the work you hand in.
Write in dark blue or black pen.
You may use an HB pencil for any diagrams or graphs.
Do not use staples, paper clips, glue or correction fluid.
DO **NOT** WRITE IN ANY BARCODES.

Answer **all** questions.
Electronic calculators may be used.
You may lose marks if you do not show your working or if you do not use appropriate units.
Take the weight of 1.0 kg to be 10 N (acceleration of free fall = 10 m/s$^2$).

At the end of the examination, fasten all your work securely together.
The number of marks is given in brackets [ ] at the end of each question or part question.

The syllabus is approved for use in England, Wales and Northern Ireland as a Cambridge International Level 1/Level 2 Certificate.



DC (NF/SG) 107603/6
© UCLES 2016

**1** A student investigates water dripping from a tap (faucet).

Fig. 1.1 shows the dripping tap and a rule next to a container collecting the drops of water.

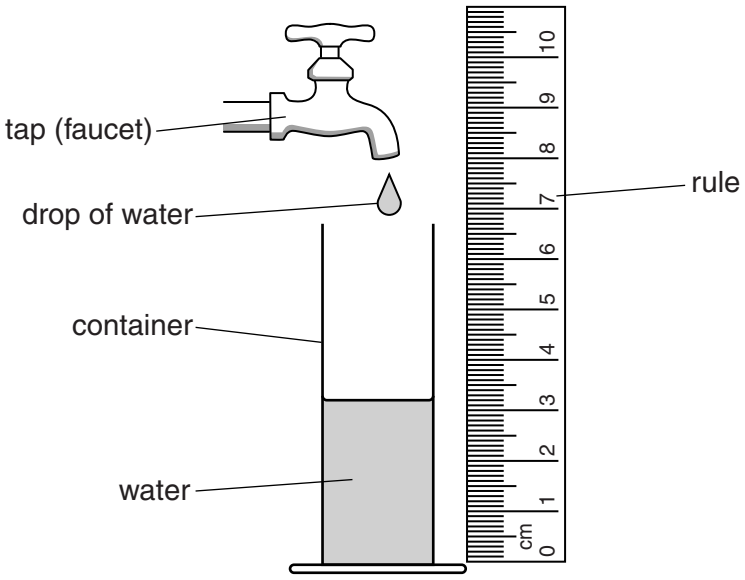


**Fig. 1.1**

**(a)** Name the quantity that the student is measuring with the rule.

..... [1]

**(b)** The student uses a digital stopwatch to measure the time between the drops of water. She repeats her measurement.

Fig. 1.2 shows the reading on the stopwatch for all her measurements.

time = ..... s

time = ..... s

time = ..... s

**Fig. 1.2**

**(i)** On the line below each stopwatch, record the time, in seconds, measured by the student. [1]

**(ii)** Calculate the average time between drops of water. Show your working.

average time between drops = ..... s [2]

© UCLES 2016

**(c)** The student collects drops of water for 15.5 minutes.

Calculate how many drops leave the tap in 15.5 minutes. Use your answer to part **b(ii)**.

number of drops = ..... [3]

[Total: 7]

**2** Fig. 2.1 shows the speed-time graph for a student cycling along a straight, flat road.

**Fig. 2.1**

**(a)** Calculate the distance he travels in the first 10 s.

distance = ..... m [3]

**(b)** Fig. 2.2 shows three pairs of forces A, B and C.

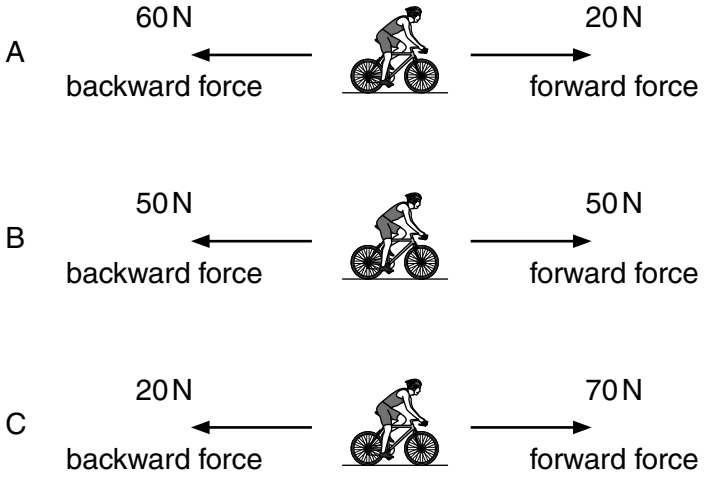


**Fig. 2.2**

Identify which pair of forces, A, B or C, acts on the cyclist between 11 s and 16 s. Explain your choice.

pair of forces .....

explanation .....

.....

.....

[3]

**(c)** The cyclist pushes on one pedal with a force of 120 N. The area of his shoe in contact with the pedal is 16 $cm^2$.

Calculate the pressure on the pedal. Include the unit.

pressure = ..... [4]

[Total: 10]

**3** Fig. 3.1 shows a girl and a boy on a see-saw.

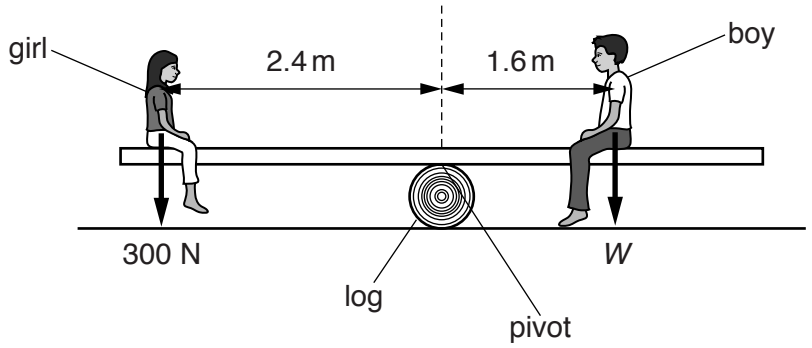


**Fig. 3.1**

The see-saw pivots on the log.

**(a)** Calculate the girl's moment about the pivot.

girl's moment = ..... N m [2]

**(b)** The see-saw is balanced horizontally.

Calculate the weight *W* of the boy.

weight of boy = ..... N [3]

[Total: 5]

© UCLES 2016

**4** A student is investigating a mixture of water and ice. The water and ice are at the same temperature. He uses a thermometer.

**(a)** Fig. 4.1 shows a thermometer.

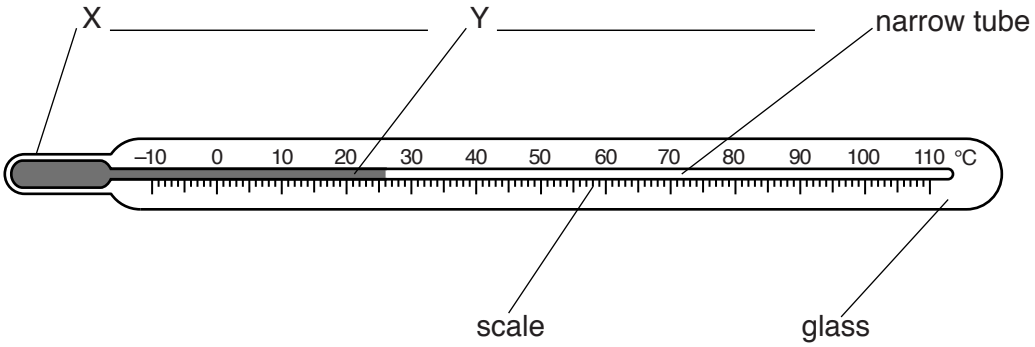


**Fig. 4.1**

**(i)** On Fig. 4.1, label X and Y. [2]

**(ii)** The thermometer is put into the mixture of water and ice.

On Fig. 4.2, draw an arrow pointing to the reading on the scale. [1]

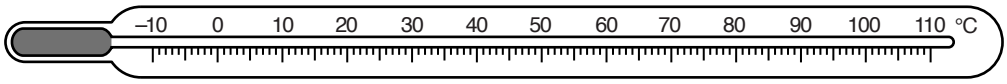


**Fig. 4.2**

**(b)** The beaker of ice and water is left in a warm room for five hours.

State what happens to the ice during this time. Describe this process in terms of the molecules in the ice.

.....

.....

.....

.....

.....

.....

[4]

[Total: 7]

**5** Fig. 5.1 shows two circuits, A and B.

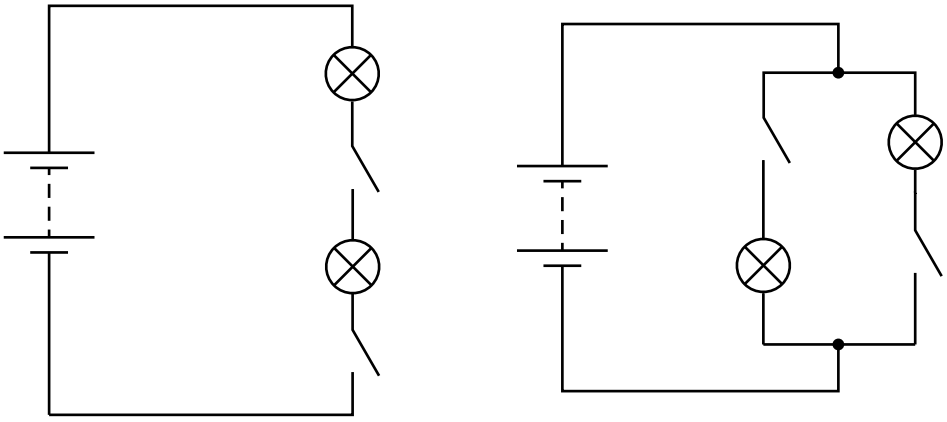

circuit A circuit B

**Fig. 5.1**

Both circuits contain a 6V power supply and two 6V lamps.

**(a)** State **two** advantages of circuit B compared to circuit A.

.....

.....

.....

..... [2]

**(b)** Fig. 5.2 shows the energy input and outputs, in one second, for one electric lamp.

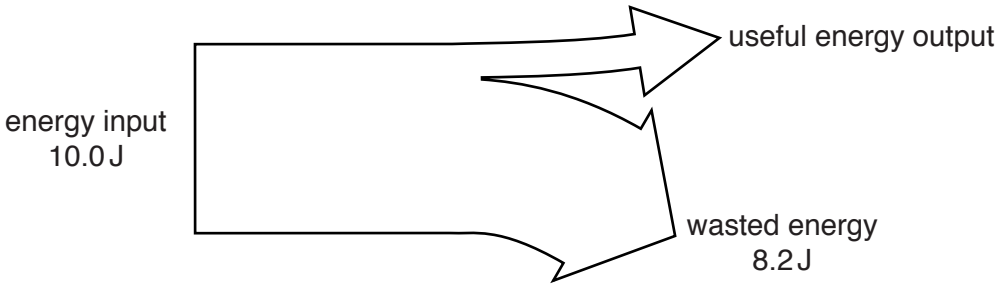


**Fig. 5.2**

**(i)** Calculate the useful energy output, in one second, of the lamp.

useful energy output = .....J [1]

© UCLES 2016

**(ii)** In the space below draw a labelled diagram, similar to Fig. 5.2, for a more efficient lamp.

[1]

**(c)** Electricity can be generated using wind turbines.

Fig. 5.3 shows two wind turbines.

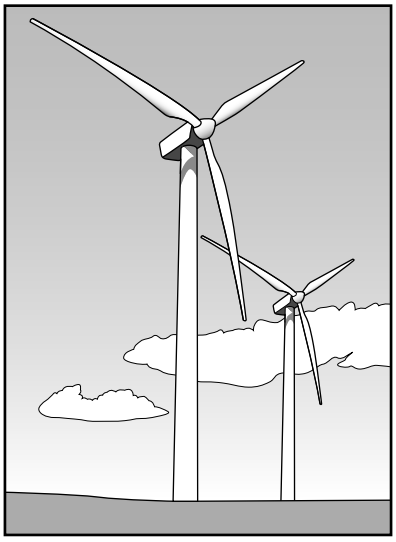

**Fig. 5.3**

State **two** advantages and **two** disadvantages of using wind turbines, rather than fossil fuels, to generate electricity.

advantages .....

.....

.....

.....

disadvantages .....

.....

.....

.....

[4]

[Total: 8]

**6** Fig. 6.1 shows the regions of the electromagnetic spectrum. Two regions have not been named.

| | | | | | | |
|---|---|---|---|---|---|---|
| gamma rays | | ultraviolet rays | visible light | infra-red waves | | radio waves |

**Fig. 6.1**

**(a)** Complete Fig. 6.1 by labelling the two regions that have not been named. [2]

**(b)** On Fig. 6.1, circle the region with the longest wavelength. [1]

**(c)** **(i)** Suggest a use for gamma radiation.

.....

..... [1]

**(ii)** Suggest a use for ultraviolet radiation.

.....

..... [1]

[Total: 5]

© UCLES 2016

**7** Fig. 7.1 shows a ray of light incident on a rectangular glass block at point X.

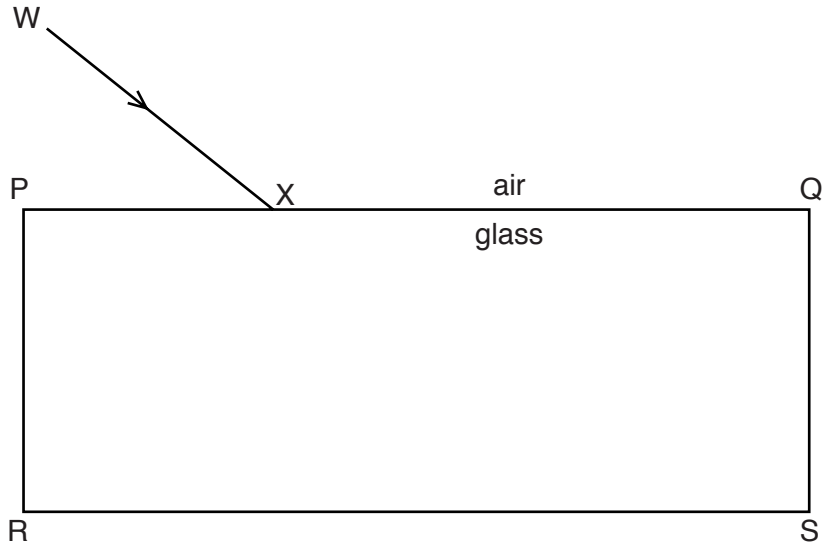


**Fig. 7.1**

The ray of light is refracted at X.

On Fig. 7.1,

**(a)** draw the normal at X, [1]

**(b)** draw the path of the ray through the glass block until it reaches the surface RS, [1]

**(c)** label, at X, the angle of incidence with a letter *i* and the angle of refraction with a letter *r*, [2]

**(d)** draw the path of the ray of light leaving the glass block. [1]

[Total: 5]

© UCLES 2016

**8** Researchers have found that the best temperature for drinking coffee is 60 °C.

A designer has developed a new type of cup for keeping coffee at 60 °C. The cup is shown in Fig. 8.1.

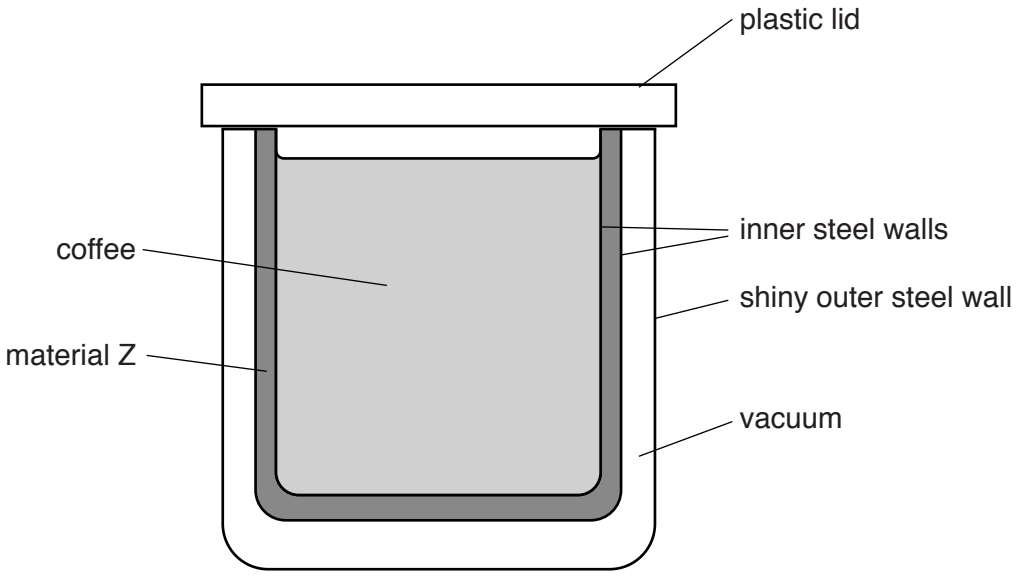


**Fig. 8.1**

Material Z has a melting point of 60 °C. At room temperature, material Z is solid.

Coffee, at a temperature of 90 °C, is poured into the cup. The coffee cools rapidly to 60 °C.

**(a)** State what happens to material Z when the hot coffee is poured into the cup.

..... [1]

**(b)** Explain how the features of the cup enable the coffee to be kept at 60 °C for a long time.

plastic lid .....

.....

.....

vacuum .....

.....

.....

shiny outer steel wall .....

.....

.....

© UCLES 2016

material Z .....

.....

.....

.....

.....
[5]

[Total: 6]

**9** **(a)** The resistance of a long piece of wire is 6.0 Ω. The potential difference across the wire is 2.0 V.

Calculate the current in the wire.

current = ..... A [3]

**(b)** A force acts on a wire carrying a current in a magnetic field.

Fig. 9.1 shows the direction of the current in the wire and the direction of the force acting on the wire.

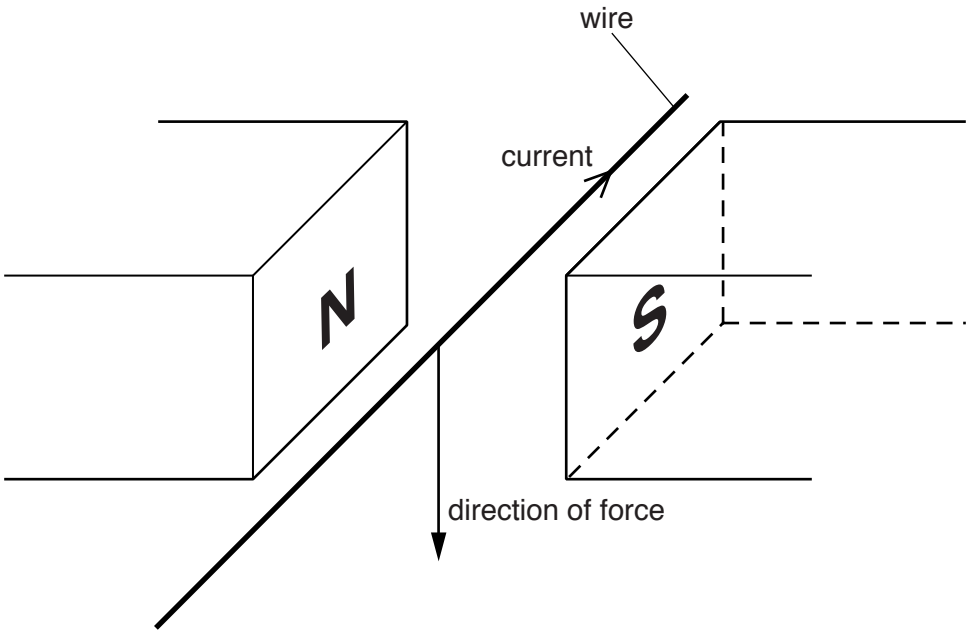


**Fig. 9.1**

**(i)** On Fig. 9.1, draw arrows to indicate the direction of the magnetic field. [1]

**(ii)** The magnetic field is reversed.

State what happens, if anything, to the direction of the force on the wire.

..... [1]

© UCLES 2016

**(c)** Fig. 9.2 shows a current-carrying coil in a magnetic field.

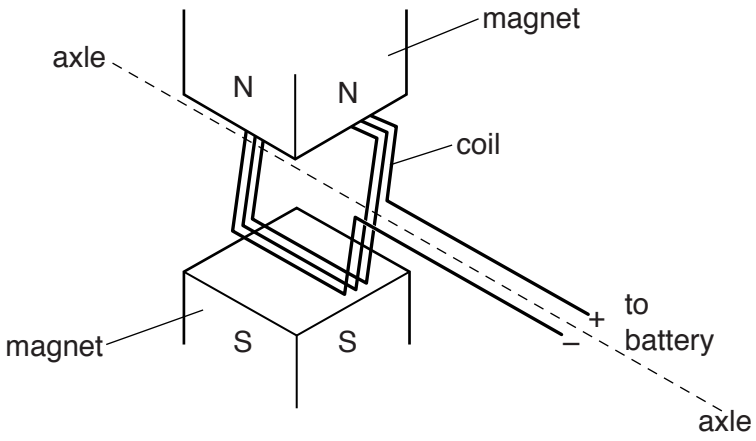


**Fig. 9.2**

The coil starts to turn about its axle.

**(i)** State **two** ways of increasing the turning effect on the coil.

1. .....

2. .....
[2]

**(ii)** Describe and explain the effect of reversing the connections to the battery.

.....

.....

.....

..... [2]

[Total: 9]

**10** Fig. 10.1 shows the charger for a laptop computer.

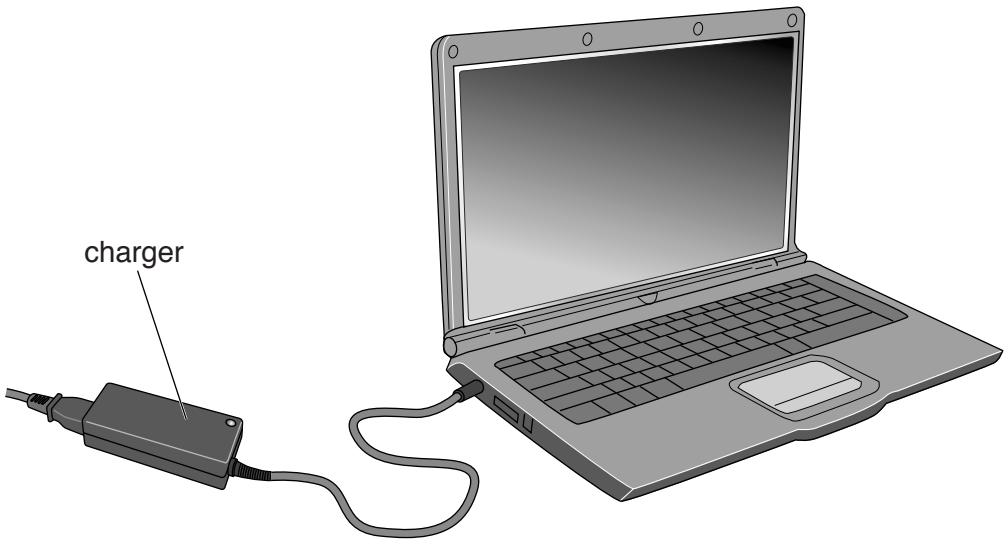


**Fig. 10.1**

The charger contains a transformer.

**(a)** The voltage across the primary coil of the transformer is 230 V.

The primary coil has 4995 turns and the secondary coil has 555 turns.

Calculate the output voltage of the transformer.

output voltage = ..... V [3]

**(b)** State the term used to describe this type of transformer.

..... [1]

[Total: 4]

© UCLES 2016

**11** **(a)** Any atomic nucleus can be represented as ${}^{A}_{Z}X$.

**(i)** State which letter, A, X or Z, is the

- chemical symbol, .....
- nucleon number, .....
- proton number. .....

[2]

**(ii)** A nucleus of americium-241 can be written as ${}^{241}_{95}Am$.

**1.** Determine the number of electrons in a neutral atom of americium-241.

number of electrons = ..... [1]

**2.** Determine the number of neutrons in a nucleus of americium-241.

number of neutrons = ..... [1]

**(b)** Explain what is meant by *isotopes* of an element.

.....

.....

.....

..... [2]

[Total: 6]

**12 (a)** A radioactive nucleus decays by the emission of a β-particle.

State what a β-particle is and give its charge.

.....

..... [2]

**(b)** The graph in Fig. 12.1 shows how the count rate from a sample of a radioactive substance varies with time.

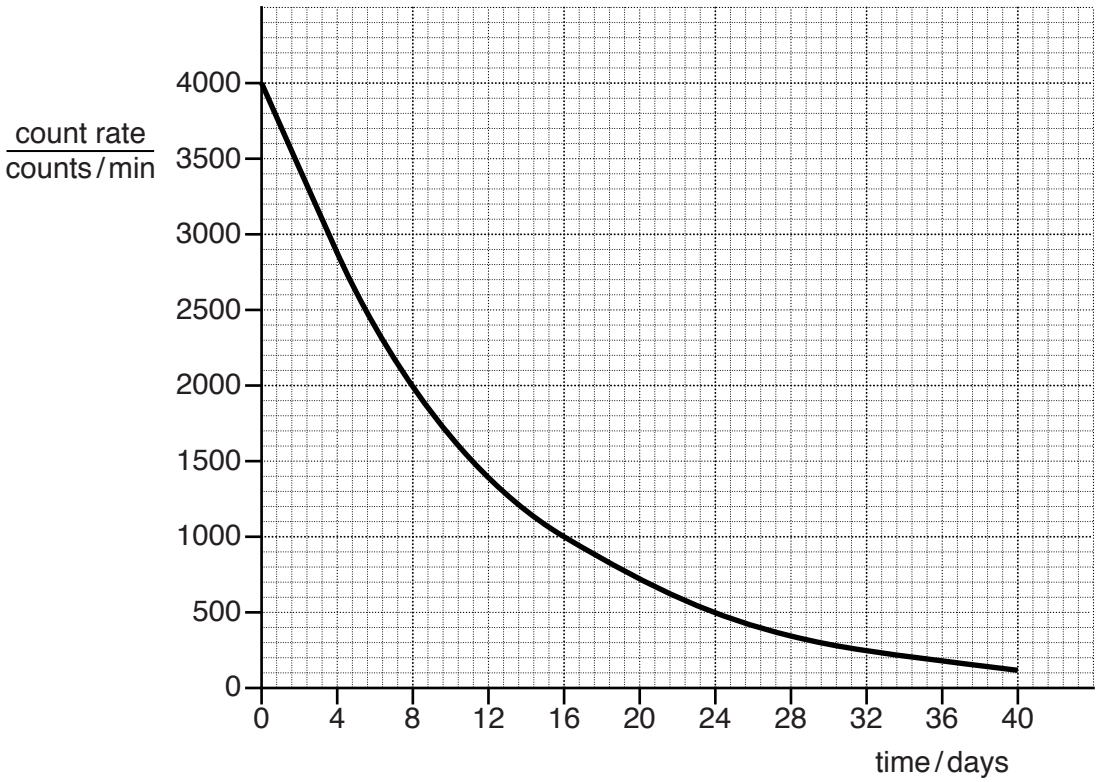


**Fig. 12.1**

Use the graph to find the half-life. Show your working on the graph.

half-life = ..... days [2]

**(c)** Following an accident, the soil around a nuclear power station is contaminated by caesium-137, which is radioactive.

A sample of this soil containing caesium-137 has a count rate of 180 counts / min. Caesium-137 has a half-life of 30 years and decays by β-emission.

**(i)** Calculate the count rate from the caesium-137 in the sample after 60 years.

count rate = ..... counts / min [2]

© UCLES 2016

**(ii)** Suggest why people do not want to live near the power station, even after it has closed.

.....

.....

.....

..... [2]

[Total: 8]

**BLANK PAGE**

Permission to reproduce items where third-party owned material protected by copyright is included has been sought and cleared where possible. Every reasonable effort has been made by the publisher (UCLES) to trace copyright holders, but if any items requiring clearance have unwittingly been included, the publisher will be pleased to make amends at the earliest possible opportunity.

To avoid the issue of disclosure of answer-related information to candidates, all copyright acknowledgements are reproduced online in the Cambridge International Examinations Copyright Acknowledgements Booklet. This is produced for each series of examinations and is freely available to download at www.cie.org.uk after the live examination series.

Cambridge International Examinations is part of the Cambridge Assessment Group. Cambridge Assessment is the brand name of University of Cambridge Local Examinations Syndicate (UCLES), which is itself a department of the University of Cambridge.

© UCLES 2016