Cambridge International Examinations
Cambridge International General Certificate of Secondary Education

CANDIDATE NAME	

CENTRE NUMBER						CANDIDATE NUMBER					

PHYSICS **0625/63**

Paper 6 Alternative to Practical **October/November 2014**

1 hour

Candidates answer on the Question Paper.

No Additional Materials are required.

READ THESE INSTRUCTIONS FIRST

Write your Centre number, candidate number and name on all the work you hand in.
Write in dark blue or black pen.
You may use an HB pencil for any diagrams or graphs.
Do not use staples, paper clips, glue or correction fluid.
DO **NOT** WRITE IN ANY BARCODES.

Answer **all** questions.
Electronic calculators may be used.
You may lose marks if you do not show your working or if you do not use appropriate units.

At the end of the examination, fasten all your work securely together.
The number of marks is given in brackets [ ] at the end of each question or part question.

The syllabus is approved for use in England, Wales and Northern Ireland as a Cambridge International Level 1/Level 2 Certificate.

This document consists of **16** printed pages.

DC (NF/SW) 82870/5
© UCLES 2014

CAMBRIDGE International Examinations

1 The IGCSE class is investigating the downward deflection of a metre rule clamped at one end.

The apparatus has been set up as shown in Fig. 1.1. The 0.0 cm mark is at the free end of the rule.

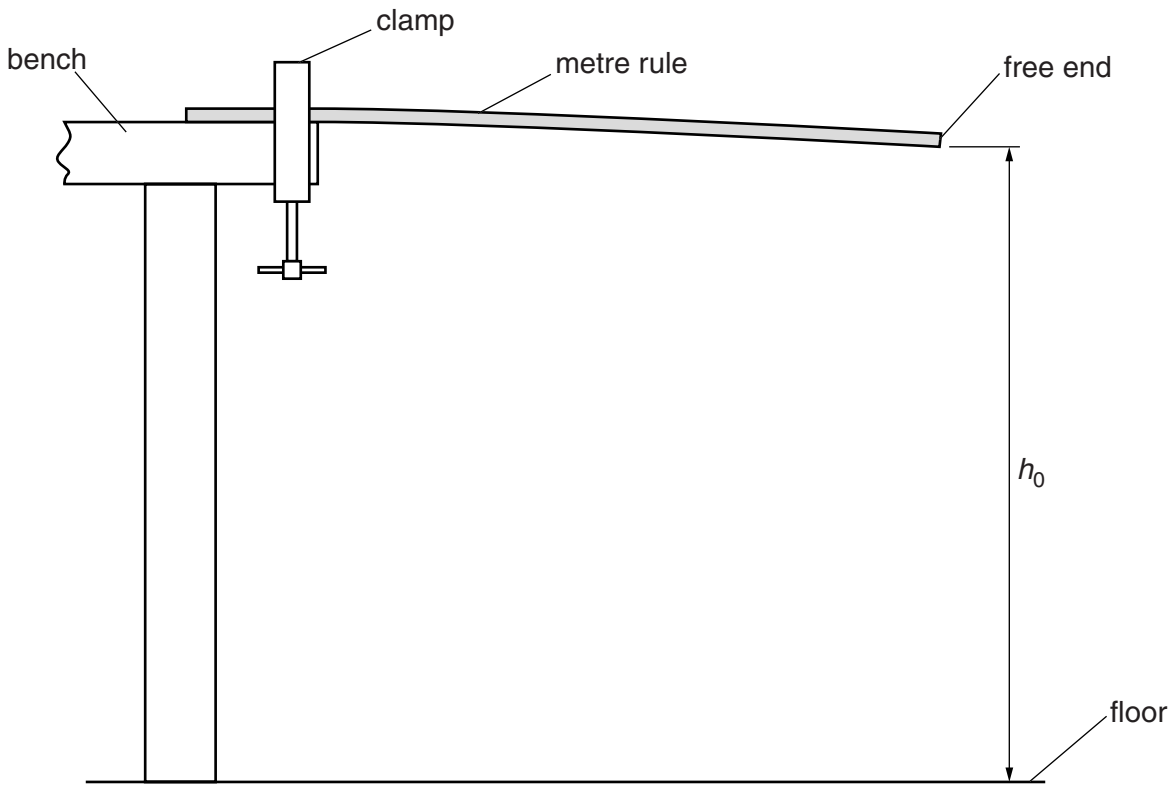

Fig. 1.1

(a) **(i)** On Fig. 1.1, measure h_0.

h_0 = ... cm

(ii) Fig. 1.1 is drawn to 1/10th scale.

Calculate and record the actual height H_0 of the free end of the metre rule above the floor.

H_0 = ... cm
[1]

(b) A student carefully places a mass on the rule at a distance d = 60.0 cm from the free end of the rule.

Explain how he could make sure that the centre of the mass was at this 60.0 cm mark. You may use a diagram.

.....

.....

..... [1]

(c) Fig. 1.2 shows the mass in place on the rule.

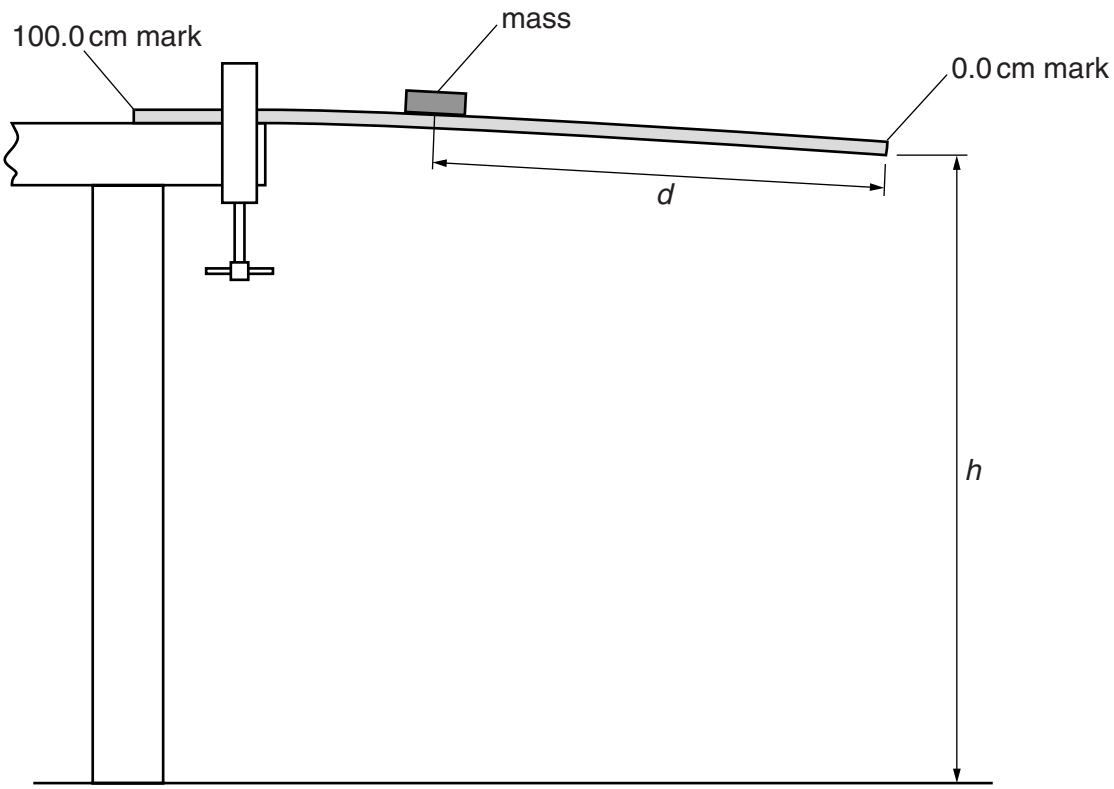

Fig. 1.2

(i) On Fig. 1.2, measure h.

h = ... cm

(ii) Fig. 1.2 is also drawn to 1/10th scale.

Calculate, and record in Table 1.1, the actual height H of the free end of the rule above the floor.

Table 1.1

d/cm	H/cm	D/cm	$(d \times D)$/cm^2
60.0			
50.0	82.5	1.5	
40.0	81.5	2.5	
30.0	80.3	3.7	
20.0	79.0	5.0	

[2]

(d) The procedure is repeated for d values of 50.0 cm, 40.0 cm, 30.0 cm and 20.0 cm. The results are shown in the table.

(i) For $d = 60.0$ cm, calculate and record in the table the downward deflection D (change in height) produced by the mass. Use the results from **(a)(ii)** and from the table, and the equation $D = H_0 - H$.

(ii) For each value of d, use the results from the table to calculate and record in the table the value of $(d \times D)$.

(e) A student suggests that the downward deflection D is inversely proportional to the distance d (that is, D is proportional to $1/d$).

Using some appropriate figures from Table 1.1, explain why this cannot be the case.

.....

.....

..... [1]

(f) **(i)** Although the metre rule is flat when placed on the bench, one student notices that the free end is slightly deflected downwards when clamped as shown in Fig. 1.1, even when the mass is not placed on it.

Explain why this deflection occurs.

.....

.....

..... [1]

(ii) Suggest how to find the value of this deflection. You may draw a diagram.

.....

.....

..... [2]

[Total: 8]

2 An IGCSE student is investigating how the surface of a container affects the rate at which water cools.

She is using two test-tubes, labelled **A** and **B**, as shown in Fig. 2.1. Test-tube **A** has no covering. Test-tube **B** is covered with foil.

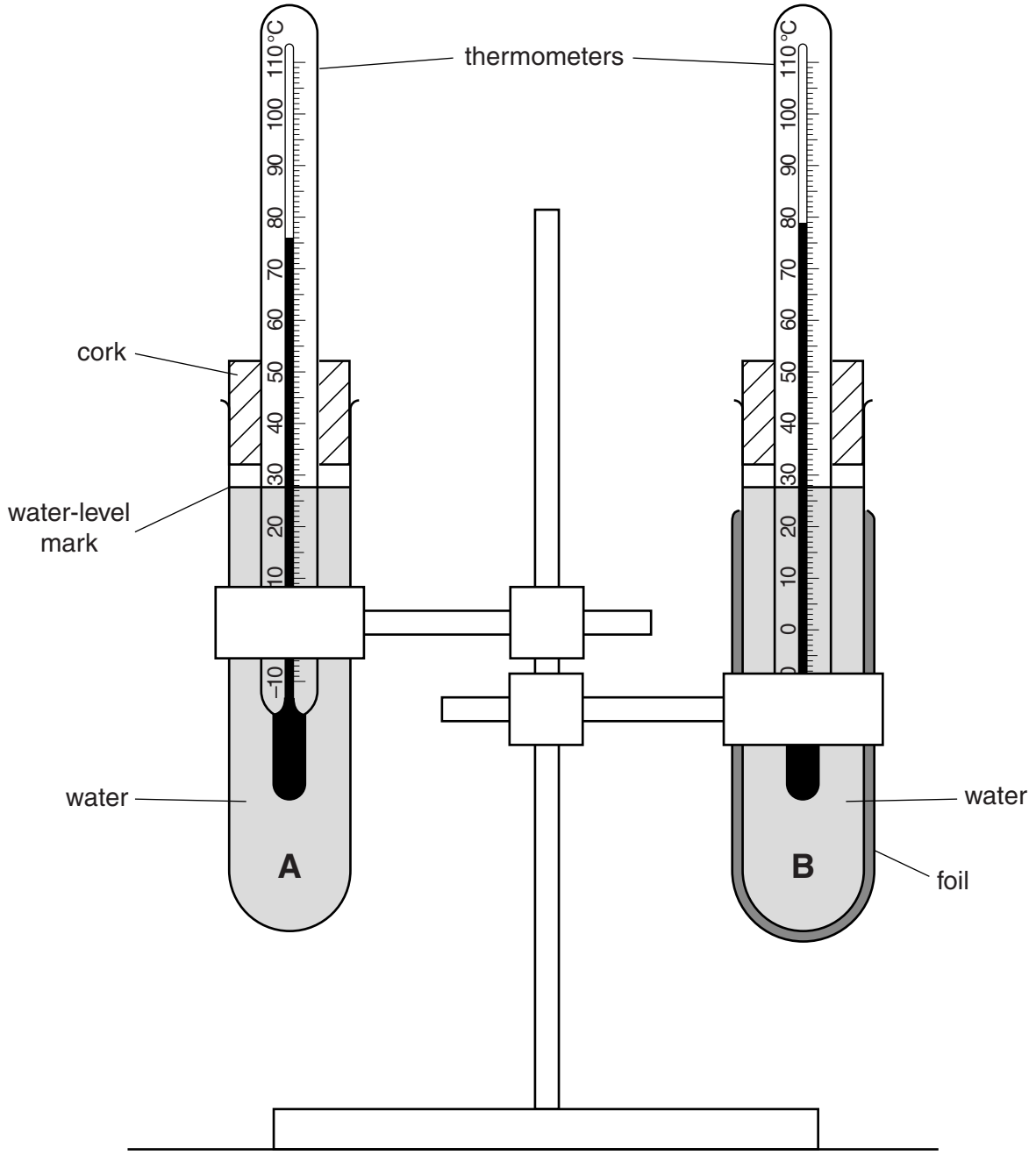

Fig. 2.1

(a) The cork and thermometer are removed from test-tube **A** and hot water is poured into the test-tube up to the marked level. The cork and thermometer are replaced.

(i) The thermometer reading rises to the value shown in Fig. 2.1.

Read and record, in the first row of Table 2.1, this temperature θ at time $t = 0$ s.

(ii) The temperatures θ of the thermometer in test-tube **A** at times $t = 30$ s, 60 s, 90 s, 120 s, 150 s and 180 s are shown in Table 2.1.

Complete the column headings and column t values in the table.

Table 2.1

	test-tube **A**	test-tube **B**
t/	θ/	θ/
	71.5	76.0
	67.5	73.0
	64.0	70.5
	60.5	68.5
	58.0	66.5
	56.0	65.0

[3]

(b) The procedure is repeated for test-tube **B**. Fig. 2.1 shows the thermometer reading of test-tube **B** at the start of the experiment.

Read and record, in the first row of Table 2.1, this temperature θ at time $t = 0$ s.

(c) The temperatures θ of the thermometer in test-tube **B** at times $t = 30$ s, 60 s, 90 s, 120 s, 150 s and 180 s are shown in the table.

State in which test-tube, **A** or **B**, the water cools at the greater rate. Justify your answer by referring to the results.

test-tube .....

justification .....

.....

.....
[2]

(d) Suggest one aspect of the practical procedure which may be a source of unreliability in the experiment.

.....

..... [1]

(e) Another IGCSE student wants to extend the experiment in order to test the effects of other surface materials.

Suggest two factors relating to the apparatus which he should keep the same in order for the tests to be fair.

1. .....

.....

2. .....

.....
[2]

[Total: 8]

3 The IGCSE class is investigating the magnification produced by a converging lens.

The apparatus is set up as shown in Fig. 3.1.

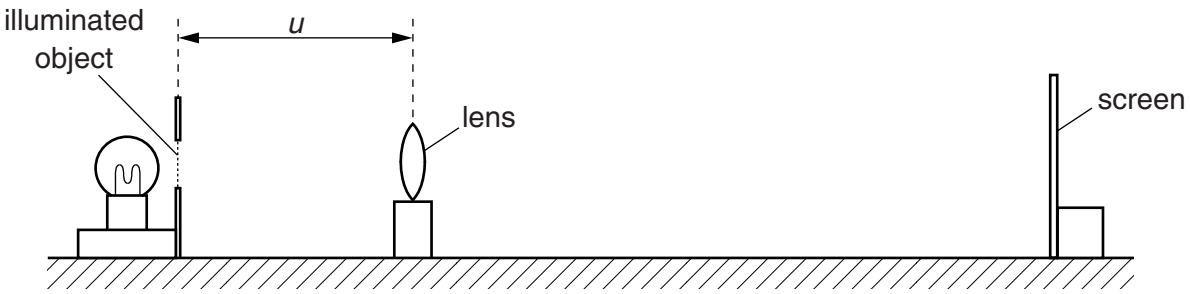

Fig. 3.1

(a) On Fig. 3.2, measure and record the height h_0 of the triangular object.

h_0 = ... cm [1]

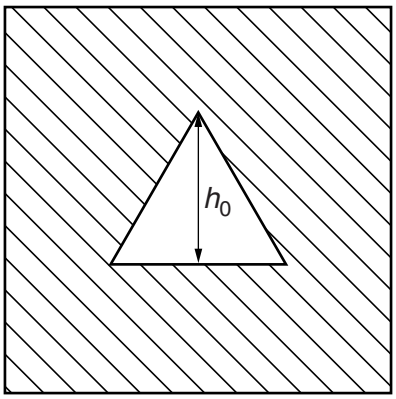

Fig. 3.2

(b) The distance u between the illuminated object and the lens is set to 30.0 cm. The screen is moved until a sharp image of the illuminated object is seen, as shown in Fig. 3.3.

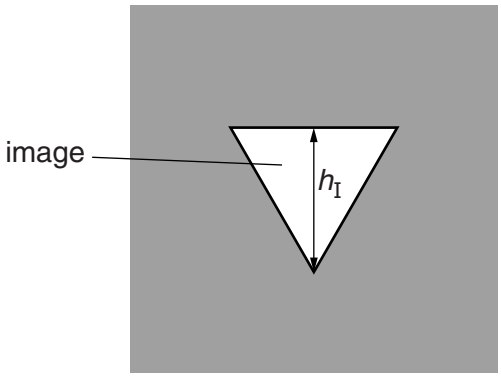

Fig. 3.3

Measure, and record in the first row of Table 3.1, the height h_I of the image.

Table 3.1

u/cm	h_I/cm	S
30.0		
35.0	1.5	
40.0	1.2	
45.0	1.0	
50.0	0.9	
55.0	0.8	

[2]

(c) The process is repeated for u values of 35.0 cm, 40.0 cm, 45.0 cm, 50.0 cm and 55.0 cm. The h_I values obtained are shown in the table.

Complete Table 3.1 by calculating the values of S, using your result from **(a)** and the equation $S = \frac{h_0}{h_I}$.

(d) Plot a graph of S (y-axis) against u/cm (x-axis).

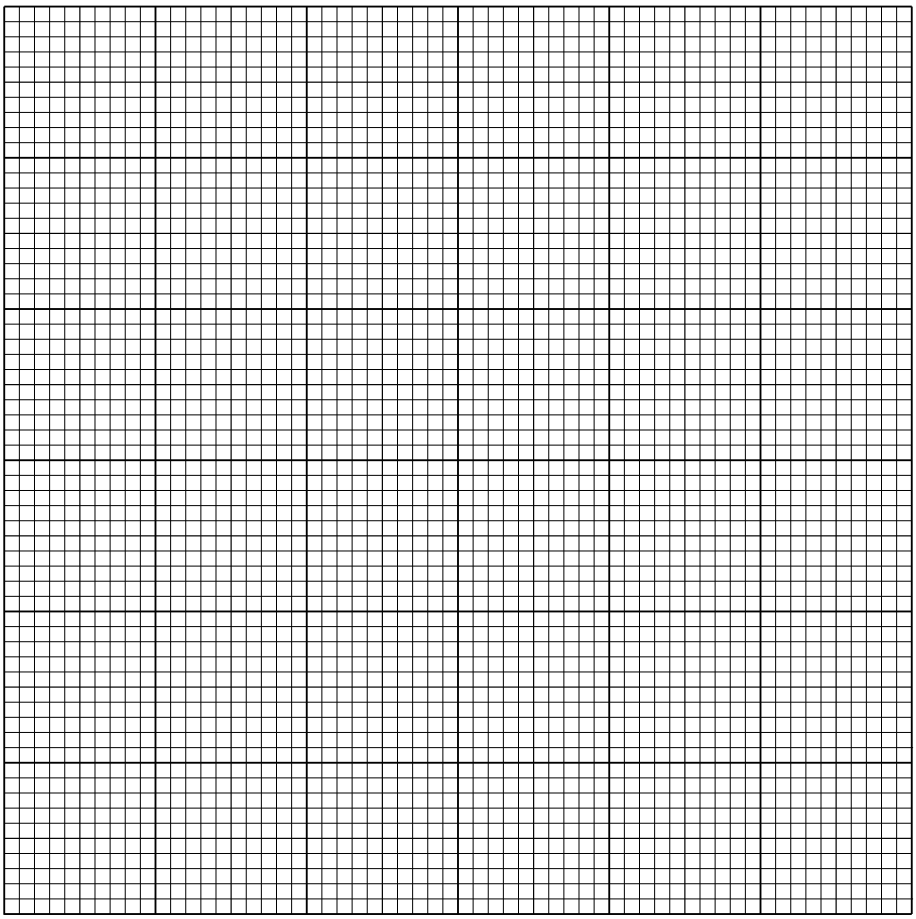

[5]

(e) **(i)** Determine the gradient G of the graph. Show clearly on the graph how you obtained the necessary information.

G = ... [1]

(ii) Calculate the focal length f of the lens, where $f = \frac{1}{G}$ cm.

f = ... [1]

[Total: 10]

4 An IGCSE student is investigating the motion of a ball down a slope.

She is using the apparatus shown in Fig. 4.1.

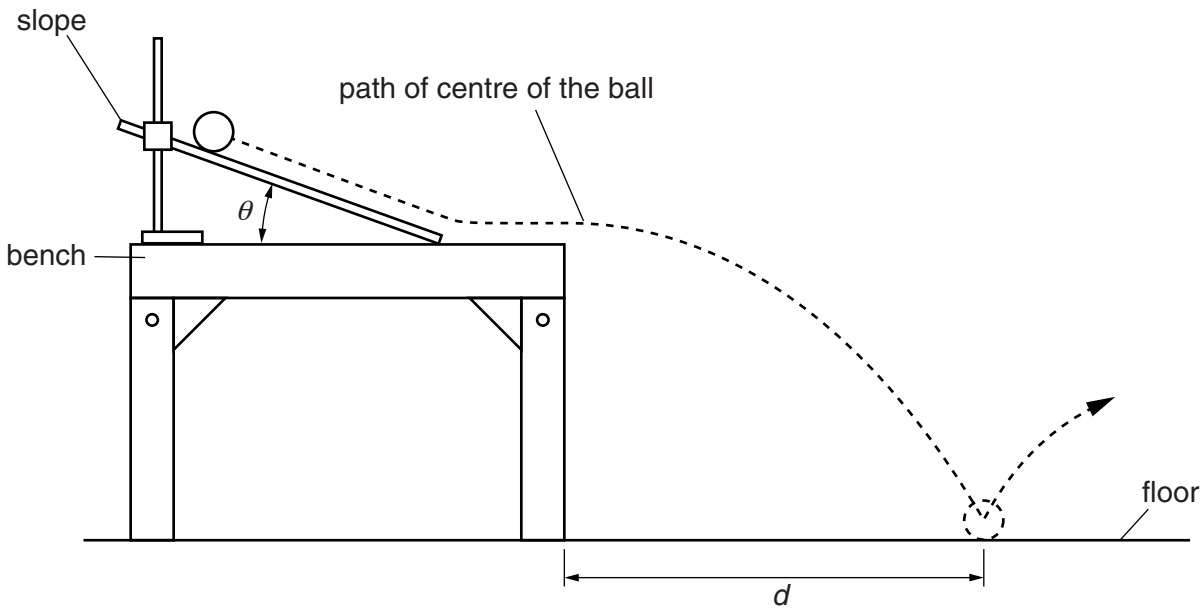

Fig. 4.1

She measures the angle θ of the slope, releases the ball from a marked point on the slope and watches where it hits the floor.

She then measures the distance d from the table to where the ball lands.

This is repeated for a number of angles, releasing the ball from the same point on the slope. Her results are shown in Table 4.1.

Table 4.1

θ/°	d/cm
20	42
30	55
40	64
50	51
60	40

(a) **(i)** Describe the pattern in the values of d as θ is increased.

.....

.....

..... [1]

(ii) From the pattern of results, predict what the d values may be for slope angles of 10° and 70°.

10° .....

70° .....
[1]

(b) The student is being assessed and must carry out the experiment on her own. She says that it is difficult to release the ball carefully and then be able to see exactly where it lands.

Suggest an improvement she might make to the experiment, so that she could obtain a more accurate measurement of d.

.....

.....

..... [1]

(c) Suggest how she might make sure that the results of the experiment are reliable.

.....

.....

..... [2]

[Total: 5]

5 Some IGCSE students are finding the resistance of a lamp in two different electrical circuits.

(a) Circuit 1 is shown in Fig. 5.1.

circuit 1

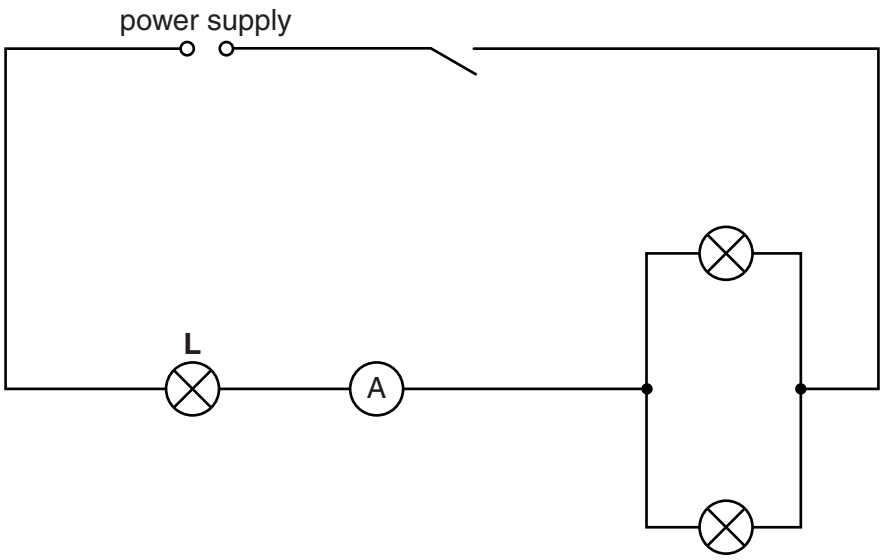

Fig. 5.1

On Fig. 5.1, draw a voltmeter connected to measure the potential difference across lamp **L**. [1]

(b) The switch is closed.

Fig. 5.2 shows the readings on the voltmeter and ammeter measuring the potential difference and the current for lamp **L**.

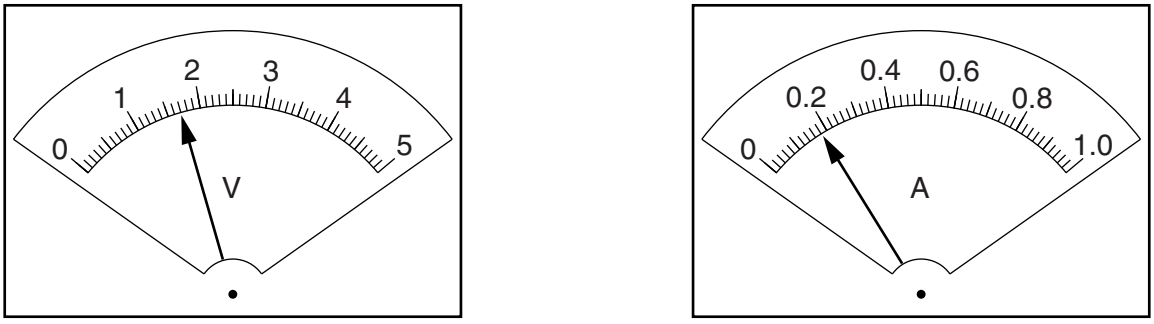

Fig. 5.2

Read, and record in Table 5.1, the potential difference V and the current I.

Table 5.1

circuit	V/	I/	R/	appearance of lamp **L**
1				bright
2	0.91	0.12		dim

(c) The circuit is reconnected as shown in Fig. 5.3.

circuit 2

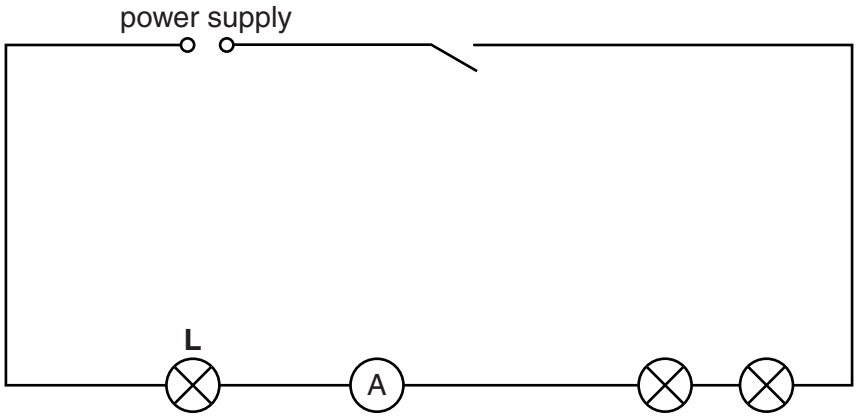

Fig. 5.3

The potential difference V and the current I for lamp **L** in this circuit are shown in the table.

(i) Using the equation $R = \frac{V}{I}$, calculate and record in the table the resistance R of lamp **L** when connected in each circuit.

(ii) Complete the column headings in the table.

[4]

(d) A student suggests that, as the same lamp **L** is used throughout the experiment, its resistance in each circuit should be the same.

State whether the findings agree with this idea. Justify your answer by reference to the results.

statement .....

.....

justification .....

.....

.....

[1]

(e) Theory suggests that the resistance of a lamp increases when its temperature rises.

Explain whether the observations in Table 5.1 support this.

.....

.....

..... [1]

(f) It is possible to change the current in this type of experiment by using a variable resistor rather than rearranging the circuit.

In the space below, draw a circuit with a power supply, a lamp, an ammeter and a variable resistor used for this purpose.

[2]

[Total: 9]

Permission to reproduce items where third-party owned material protected by copyright is included has been sought and cleared where possible. Every reasonable effort has been made by the publisher (UCLES) to trace copyright holders, but if any items requiring clearance have unwittingly been included, the publisher will be pleased to make amends at the earliest possible opportunity.

Cambridge International Examinations is part of the Cambridge Assessment Group. Cambridge Assessment is the brand name of University of Cambridge Local Examinations Syndicate (UCLES), which is itself a department of the University of Cambridge.

© UCLES 2014