Cell Division and Inheritance

Question Paper

Level	IGCSE
Subject	Biology (4401)
Exam Board	AQA
Unit	B2
Topic	Cell Division and Inheritance
Booklet	Question Paper

Time Allowed: **46 minutes**

Score: **/46**

Percentage: **/100**

Grade Boundaries:

Q1.(a) In humans there are two types of cell division: **mitosis** and **meiosis.**

The table below gives statements about cell division.

Tick (✓) **one** box in each row to show if the statement is true for mitosis only, for meiosis only, or for both mitosis **and** meiosis.

The first row has been done for you.

Statement	**Mitosis only**	**Meiosis only**	**Both mitosis and meiosis**
How cells are replaced	✓		
How gametes are made			
How a fertilised egg undergoes cell division			
How copies of the genetic information are made			
How genetically identical cells are produced			

(4)

(b) Stem cells can be taken from human embryos.

In therapeutic cloning, an embryo is produced that has the same genes as the patient.

(i) Name **one** source of human stem cells, other than human embryos.

.....

(1)

(ii) Stem cells from embryos can be transplanted into patients for medical treatment.

Give **one** advantage of using stem cells from embryos, compared with cells from the source you named in part (i).

(1)

.....

.....

(Total 6 marks)

Q2. The maps show the present distribution of malaria and the sickle-cell allele in Africa.

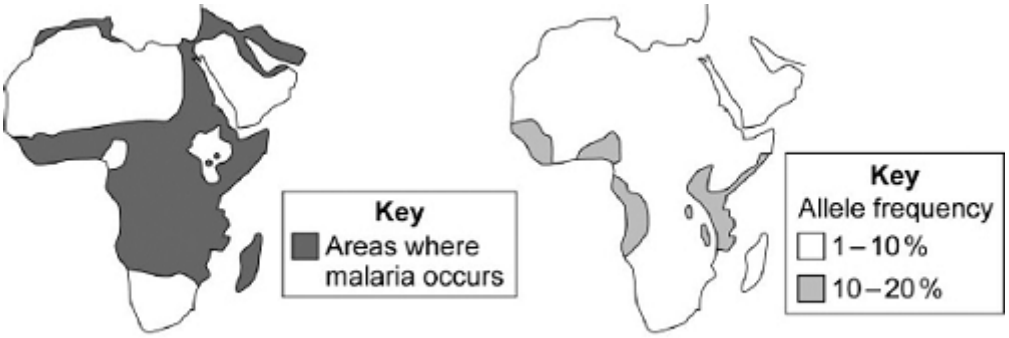

Distribution of malaria **Distribution of sickle-cell allele**

(a) Draw a genetic diagram to show how sickle-cell anaemia can be inherited from parents who do not have the condition.

Key to symbols for alleles:

Hb^A Normal adult haemoglobin
Hb^S Sickle-cell haemoglobin

(4)

(b) (i) Explain the link between sickle-cell anaemia, resistance to malaria and the frequency of the Hb^S allele.

.....

.....

.....

.....

.....

.....

(3)

(ii) Select and evaluate the evidence from the maps that accounts for the distribution of the sickle-cell allele and the resistance to malaria in parts of Africa.

.....

.....

.....

.....

(2)
(Total 9 marks)

Q3. Eye colour is controlled by genes.

The dominant allele of the gene **(b)** produces brown eyes. The recessive allele (**b**) produces blue eyes.

A homozygous blue-eyed woman married a homozygous brown-eyed man.

All of their three children had brown eyes.

(a) (i) Complete the genetic diagram.

		Woman	
		b	.....
Man	B	.....	.....
	.....	.....	.....

(2)

(ii) Give the reason why all of the children had brown eyes.

.....

.....

(1)

(b) The couple's brown-eyed son and his brown-eyed partner had five children. Two of the children had blue eyes and three of the children had brown eyes.

Use a genetic diagram to show how two of their children came to have blue eyes.

.....

.....

.....

(3)
(Total 6 marks)

Q4. The diagram shows part of a DNA molecule.

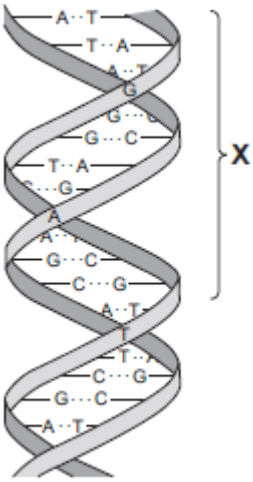

(a) (i) In which part of an animal cell is DNA found?

.....

(1)

(ii) Complete the following sentence.

The letters **A**, **C**, **G** and **T** in the diagram represent four different compounds

called ..... .

(1)

(iii) One strand of the DNA, in the section labelled **X**, contains the following sequence of these compounds:

T A T G G G T C T T C G

How many amino acids would this section of the DNA code for? ☐

(1)

(iv) The section of DNA described in part **(a) (iii)** is a small part of a gene.

The sequence of compounds **A**, **C**, **G** and **T** in the gene is important.

Explain why.

.....

.....

.....

.....

(2)

(b) *Read the following information about genetic engineering.*

The caterpillar of the European Corn Borer moth feeds on the fruits of maize (sweet corn). There is a chemical called Bt-toxin which is poisonous to the corn borer caterpillar but not to humans.

Scientists carried out the following steps.

1. The Scientists made a bacterial plasmid to which they added two genes:
   - **Bt** gene, which coded for production of the Bt-toxin
   - **kan**^{r} gene, which coded for resistance to an antibiotic called kanamycin.

2. They used this plasmid to produce genetically modified bacteria which could invade plant cells.

3. They mixed these genetically modified bacteria with pieces cut from maize leaves.

4. They placed the pieces of maize leaf on agar jelly in a Petri dish. The agar jelly contained the antibiotic, kanamycin. The kanamycin killed most of the pieces of maize leaf, but a few survived.

5. They took some cells from the surviving pieces of maize leaf and grew them in tissue culture.

The result was maize plants that now contained the **Bt** gene, as well as the **kan**^{r} gene, in all of their cells.

(i) What is a **plasmid** (Step 1)?

.....

.....

.....

.....

(2)

(ii) Why did the scientists add **kanamycin** to the agar jelly (Step 4)?

.....

.....

.....

.....

(2)

(iii) The scientists grew each Bt-maize plant from a single cell which contained the **Bt** gene.

Explain why **all** the cells in the Bt-maize plant contained the **Bt** gene.

.....

.....

.....

.....

(2)

(iv) Kanamycin is an antibiotic.

Some scientists are concerned that the gene for kanamycin resistance has been put into maize.

Suggest why.

.....

.....

.....

.....

.....

.....

(2)
(Total 13 marks)

Q5. Some genetic disorders are caused by alleles inherited from the parents.

(a) What are **alleles**?

.....

.....

(1)

(b) Describe how embryos can be screened for the alleles that cause genetic disorders.

.....

.....

.....

.....

.....

.....

.....

.....

.....

.....

(4)

(c) Polydactyly is a genetic disorder that leads to extra fingers or toes.

Polydactyly is caused by a dominant allele, **D**.

The photograph shows the hand of a person with polydactyly.

A man has polydactyly. His wife does not have polydactyly.

This couple's children have a 50% chance of having polydactyly.

Draw a genetic diagram to explain why.

(3)

(d) Cystic fibrosis is another genetic disorder. It is caused by a recessive allele.

The diagram shows the inheritance of cystic fibrosis in one family.

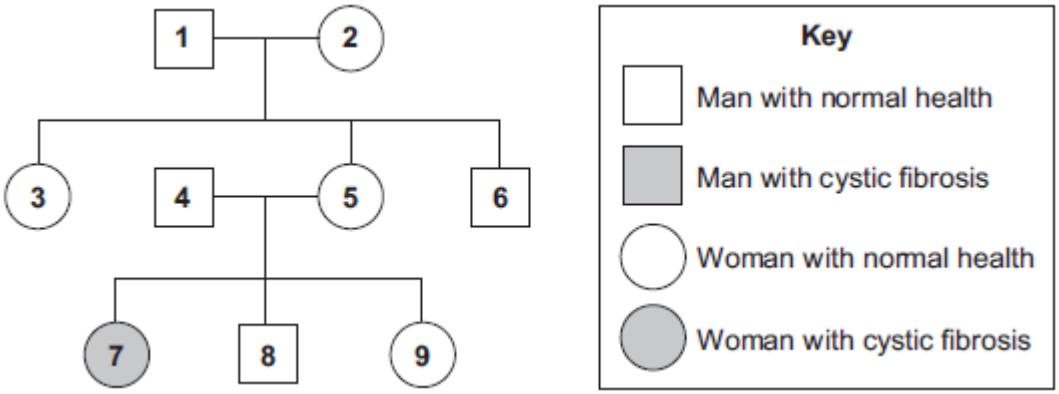

Woman **5** is pregnant with her fourth child.

What is the probability that this child will have cystic fibrosis?

Draw a genetic diagram to explain your answer.

Use the following symbols.

N = allele for normal health
n = allele for cystic fibrosis

(4)
(Total 12 marks)